Physics 111

Exam #1

February 8, 2019

Name_____

Please read and follow these instructions carefully:

- Read all problems carefully before attempting to solve them.
- Your work must be legible, and the organization clear.
- You must show all work, including correct vector notation.
- You will not receive full credit for correct answers without adequate explanations.
- You will not receive full credit if incorrect work or explanations are mixed in with correct work. So erase or cross out anything you don't want graded.
- Make explanations complete but brief. Do not write a lot of prose.
- Include diagrams.
- Show what goes into a calculation, not just the final number. For example $|\vec{p}| \approx m|\vec{v}| = (5kg) \times (2\frac{m}{s}) = 10\frac{kg \cdot m}{s}$
- Give standard SI units with your results unless specifically asked for a certain unit.
- Unless specifically asked to derive a result, you may start with the formulas given on the formula sheet including equations corresponding to the fundamental concepts.
- Go for partial credit. If you cannot do some portion of a problem, invent a symbol and/or value for the quantity you can't calculate (explain that you are doing this), and use it to do the rest of the problem.
- All multiple choice questions are worth 3 points and each free-response part is worth 9 points

Problem #1	/24
Problem #2	/24
Problem #3	/24
Total	/72

I affirm that I have carried out my academic endeavors with full academic honesty.

_____

1. Point Charges

a. Four point charges each with mass m and charges as shown below are located on the corners of a square of side length l. In terms of the variables given, what is the net electric force on the $+2q$ point charge located in the upper right corner of the square (colored red) due to the other three point charges (colored blue)?

Starting at the origin and proceeding clockwise we label the charges 1, 2, 3, & 4.

$$\sum F_x : F_{2,3} + F_{1,3}\cos\theta = \frac{kq(2q)}{l^2} + \frac{k(2q)(2q)}{2l^2}\left[\frac{l}{\sqrt{2}l}\right] = \frac{2kq^2}{l^2}\left[1+\frac{\sqrt{2}}{2}\right] = \frac{3.4kq^2}{l^2}$$

$$\sum F_y : F_{4,3} + F_{1,3}\sin\theta = \frac{kq(2q)}{l^2} + \frac{k(2q)(2q)}{2l^2}\left[\frac{l}{\sqrt{2}l}\right] = \frac{2kq^2}{l^2}\left[1+\frac{\sqrt{2}}{2}\right] = \frac{3.4kq^2}{l^2}$$

$$F_{net} = \sqrt{F_x^2 + F_y^2} = \sqrt{\left(\frac{3.4kq^2}{l^2}\right) + \left(\frac{3.4kq^2}{l^2}\right)} = \frac{4.8kq^2}{l^2}$$

$$\phi = \tan^{-1}\left(\frac{F_y}{F_x}\right) = \tan^{-1}\left(\frac{\frac{3.4kq^2}{l^2}}{\frac{3.4kq^2}{l^2}}\right) = \tan^{-1}(1) = 45^0$$

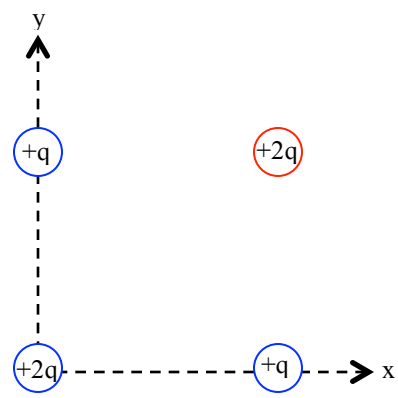

b. Suppose that the $+2q$ point charge (colored red) were removed from the upper right corner of the square. The direction of the net electric field at the point where the charged was removed is given by which of the following?

1. The net electric field vector is oriented 45^0 above the positive x-axis.
2. The net electric field vector is oriented 45^0 below the positive x-axis.
3. The net electric field vector is oriented 45^0 above the negative x-axis.
4. The net electric field vector is oriented 45^0 below the negative x-axis.
5. The net electric field is zero since the charge was removed, so there is no direction to the electric filed vector.

c. How much work would it have taken to remove the $+2q$ point charge from the upper right corner (colored red) to a point very far away?

$$W = -q\Delta V = -2q\left[0-\left(V_1+V_2+V_4\right)\right] = 2q\left[\frac{k2q}{\sqrt{2}l}+\frac{kq}{l}+\frac{kq}{l}\right] = \frac{2kq^2}{l}\left[\sqrt{2}+1+1\right]$$

$$W = \frac{6.8kq^2}{l}$$

d. If instead of a $+2q$ point charge, a $-2q$ point charge were instead located at the upper right hand corner of the square. In this situation, which, if any, of the following quantities would change?

I. The net electric force on the $-2q$ point charge due to the other charges.
II. The electric field at the location of the $-2q$ point charge.
III. The work done to remove the $-2q$ point charge to a location very far away.

1. I only.
2. II only.
3. I and III.
4. I, II, and III.
5. None of the quantities would change.

2. RC Circuits
   a. Bradycardia is a cardiac condition in which the heart rate (or the number of heartbeats per minute) is too slow, generally at a rate lower than $60\,bpm$. Bradycardia may be caused by a wide array of factors including age, heart disease, low thyroid function (hypothyroidism), and possibly problems with the sinoatrail node (the heart's natural pacemaker. To correct for bradycardia one may be prescribed medication or one may have an artificial pacemaker installed. The artificial cardiac pacemaker is a tunable resistor-capacitor circuit. To construct the pacemaker you build a capacitor out of two square metal plates with sides of length $l = 30mm$ separated by a gap of $d = 1mm$. The space between the gap between the plates is filled with an insulating material with a dielectric constant $\kappa = 22{,}600$. The resistor in the circuit is variable and can be set externally to control the heartbeat and the capacitor discharges through the resistor every time the capacitor reaches 90% of its maximum charge. Suppose that the physician requires the heart rate to be $68\,bpm$, what resistance would need to be set to accomplish this?

$$t = \frac{1\min}{68beats} \times \frac{60s}{1\min} = 0.88s$$

$$C = \frac{\kappa\varepsilon_0 A}{d} = \frac{22600 \times 8.85 \times 10^{-12}\,\frac{C^2}{Nm^2} \times \left(30 \times 10^{-3} m\right)^2}{1 \times 10^{-3} m} = 1.8 \times 10^{-7} F$$

$$Q(t) = Q_{\max}\left(1 - e^{-\frac{t}{RC}}\right) \rightarrow \frac{t}{RC} = -\ln\left(1 - \frac{Q(t)}{Q_{\max}}\right)$$

$$\rightarrow R = -\frac{t}{C\ln\left(1 - \frac{Q(t)}{Q_{\max}}\right)} = -\frac{0.88s}{1.8 \times 10^{-7} F \times \ln(1 - 0.9)} = 2.1 \times 10^6 \Omega = 2.1 M\Omega$$

   b. If the physician instead wanted to make the heart rate something greater than $68\,bpm$, which of the following could possibly be done to make the heart rate increase?
      1. Increase the resistance of the circuit so that the time constant of the circuit increases.
      2. Increase the resistance of the circuit so that the time constant of the circuit decreases.
      3. Decrease the resistance of the circuit so that the time constant of the circuit increases.
      4. Decrease the resistance of the circuit so that the time constant of the circuit decreases.
      5. There is no way to change in resistance in such as way as to affect the heart rate.

c. Of course not all heart conditions are diagnosed and subsequently treated. Unfortunately many people suffer a heart attack as a result of an undiagnosed heart condition. Suppose that you are a paramedic and you are called to an accident scene where a person is in full cardiac arrest. To attempt to revive the victim you use a defibrillator. A defibrillator is constructed out of two square metal paddles with sides of length $l = 15cm$. The system is charged using a voltage source rated at $5000V$. When placed on the chest the capacitor system discharges through the heart. Suppose that the separation between the paddles when placed on the chest is $d = 5cm$ and that the resistance of the body is approximately 5000Ω. How much energy is stored in the fully charged capacitor before it is discharged through the body and how long does it take to discharge the defibrillator to 1% of its initial stored charge?

$$C = \frac{\kappa\varepsilon_0 A}{d} = \frac{8.85\times10^{-12}\frac{C^2}{Nm^2}\times(0.15m)^2}{0.05m} = 4\times10^{-12}F$$

$$E = \frac{1}{2}CV^2 = \frac{1}{2}\times4\times10^{-12}F(5000V)^2 = 5\times10^{-5}J = 50\mu J$$

$$Q(t) = 0.01Q_{\max} = Q_{\max}e^{-\frac{t}{RC}} \rightarrow t = -RC\ln(0.01) = -5000\Omega\times4\times10^{-12}F\ln(0.01) = 1.1\times10^{-7}s$$

d. Suppose that you had four capacitors (each with a different capacitance) that were each fully charged individually using a battery with potential difference V. The battery is then removed from each fully charged capacitor. Next each individual capacitor is separately connected in series to a resistor (and each resistor has a resistance R). The capacitors discharge through their individual resistor and plots of the potential difference across the discharging capacitors as a function of time are given below. From the graph below, which curve has a time constant of $\tau = 100s$?

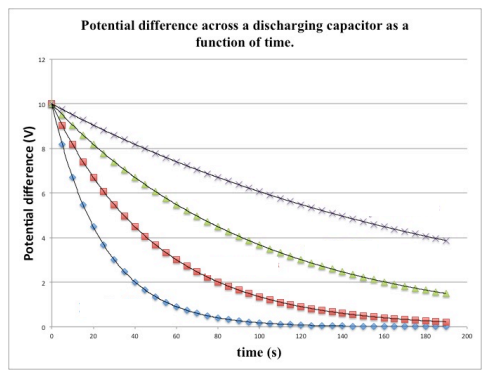

1. The blue curve.
2. The red curve.
3. The green curve.
4. The purple curve.
5. It is not possible to determine which curve has a $\tau = 100s$ time constant with out more information.

3. Circuits and Magnetic Fields

A mass spectrometer is constructed as shown below. Singly ionized atoms are accelerated from rest through a potential difference of $1500V$. After they are accelerated the ions enter a region of uniform magnetic field (the blue dots) of strength $1.4T$ pointing out of the plane of the page perpendicular the velocity of the ions.

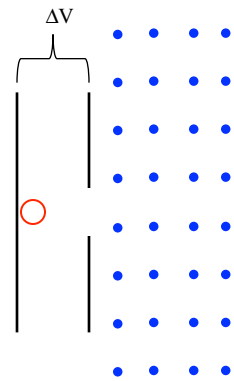

a. Calcium is an important element in many biological functions and has several stable isotopes, or atoms with the same number of protons but different numbers of neutrons. Two stable isotopes of calcium are ${}^{40}_{20}Ca$ and ${}^{43}_{20}Ca$. In terms of the radius of the ${}^{40}_{20}Ca$ ion, will the ion ${}^{43}_{20}Ca$ ion strike above or below the exit hole on the right plate ***and*** what is the radius of the ${}^{43}_{20}Ca$ ion in in terms of the radius of the ${}^{40}_{20}Ca$ ion?

$$W = -q\Delta V = \Delta K = \tfrac{1}{2}mv_f^2 - \tfrac{1}{2}mv_i^2 \rightarrow v_f = \sqrt{\frac{-2q\Delta V}{m}}$$

$$F_B = qv_\perp B = \frac{mv_\perp^2}{R} \rightarrow R = \frac{mv_\perp}{qB} = \frac{m}{qB}\sqrt{\frac{-2q\Delta V}{m}} = \sqrt{\frac{-2m\Delta V}{qB^2}}$$

$$\rightarrow R_{{}^{40}Ca} = \sqrt{\frac{-2m_{{}^{40}Ca}\Delta V}{eB^2}}$$

$$\rightarrow R_{{}^{43}Ca} = \sqrt{\frac{-2m_{{}^{43}Ca}\Delta V}{eB^2}} = \sqrt{m_{{}^{43}Ca}} \times \sqrt{\frac{-2\Delta V}{eB^2}} = \sqrt{m_{{}^{43}Ca}} \times \frac{R_{{}^{40}Ca}}{\sqrt{m_{{}^{40}Ca}}}$$

$$\therefore R_{{}^{43}Ca} = \sqrt{\frac{m_{{}^{43}Ca}}{m_{{}^{40}Ca}}} R_{{}^{40}Ca}$$

and the ${}^{43}_{20}Ca$ ion will strike below the exit hole by the RHR.

b. Suppose that instead of ions you had a source of neutrons that are accelerated through a potential difference of $1500V$. Which of the following describes the motion of the neutrons through the magnetic field?

1. The beam of neutrons will strike the detector above the exit hole but closer to the exit hole than either of the calcium ions since the mass of the neutrons is smaller.
2. The beam of neutrons will strike the detector below the exit hole but closer to the exit hole than either of the calcium ions since the mass of the neutrons is smaller.
3. The beam of neutrons will strike the detector above the exit hole but farther from the exit hole than either of the calcium ions since the mass of the neutrons is smaller.
4. The beam of neutrons will strike the detector below the exit hole but farther from the exit hole than either of the calcium ions since the mass of the neutrons is smaller.
5. The beam of neutrons will go undefeated and strike neither detector.

c. Suppose instead of the mass spectrometer shown above, you have the following circuit in which each of the resistors has a resistance R and the combination is connected to a battery of potential difference V. Which of the following gives the total current produced by the battery?

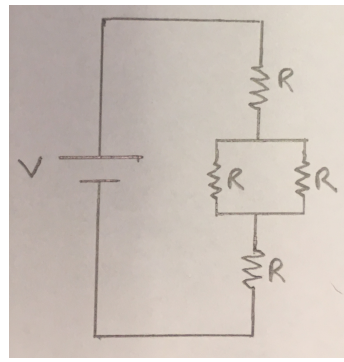

1. $I = \frac{4V}{R}$.
2. $I = \frac{V}{4R}$.
3. $I = \frac{V}{R}$.
4. $I = \frac{5V}{2R}$.
5. $I = \frac{2V}{5R}$.

d. Suppose that that you have the following situation. A $300V$ battery is connected to a single resistor with resistance of 100Ω. A rectangular loop of wire with dimension shown is located to the right of and in the plane of the circuit. What is the net force on the rectangular loop of wire if a $10A$ current flows counter-clockwise in the rectangular loop of wire? Note: the battery and resistor in the rectangular loop of wire are not shown for clarity.

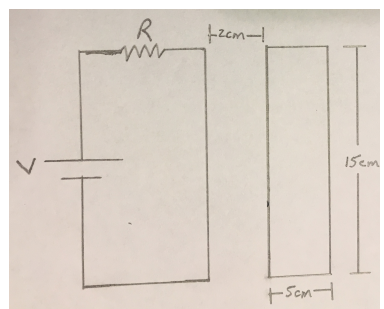

$$I_{circuit} = \frac{V_{circuit}}{R} = 3A$$

$$\sum F_y : F_{top} - F_{bottom} = 0$$

$$\sum F_x : F_{right} - F_{left} = I_{loop} L B_{circuit} - I_{loop} L B'_{circuit}$$

$$\rightarrow F_x = I_{loop} L \left[\frac{\mu_0 I_{circuit}}{2\pi r_{right}} - \frac{\mu_0 I_{circuit}}{2\pi r_{right}} \right] = \frac{\mu_0 I_{loop} I_{circuit} L}{2\pi} \left[\frac{1}{r_{right}} - \frac{1}{r_{left}} \right]$$

$$F_x = \frac{4\pi \times 10^{-7} \frac{Tm}{A} \times 10A \times 3A \times 0.15m}{2\pi} \left[\frac{1}{0.07m} - \frac{1}{0.02m} \right] = -3.2 \times 10^{-5} N$$

$$F_x = -3.2 \times 10^{-5} N$$

Or the wire loop will move to the left toward the circuit on the left.

Physics 111 Equation Sheet

Electric Forces, Fields and Potentials

$$\vec{F} = k\frac{Q_1Q_2}{r^2}\hat{r}$$

$$\vec{E} = \frac{\vec{F}}{q}$$

$$\vec{E}_Q = k\frac{Q}{r^2}\hat{r}$$

$$PE = k\frac{Q_1Q_2}{r}$$

$$V(r) = k\frac{Q}{r}$$

$$E_x = -\frac{\Delta V}{\Delta x}$$

$$W = -q\Delta V = -q\left[V_f - V_i\right]$$

Magnetic Forces and Fields

$$F = qvB\sin\theta$$

$$F = IlB\sin\theta$$

$$\tau = NIAB\sin\theta = \mu B\sin\theta$$

$$PE = -\mu B\cos\theta$$

$$B = \frac{\mu_0 I}{2\pi r}$$

$$\varepsilon_{induced} = -N\frac{\Delta\phi_B}{\Delta t} = -N\frac{\Delta(BA\cos\theta)}{\Delta t}$$

Constants

$$g = 9.8\,\tfrac{m}{s^2}$$

$$1e = 1.6\times10^{-19}C$$

$$k = \frac{1}{4\pi\varepsilon_o} = 9\times10^{9}\,\tfrac{Nm^2}{C^2}$$

$$\varepsilon_o = 8.85\times10^{-12}\,\tfrac{C^2}{Nm^2}$$

$$1eV = 1.6\times10^{-19}J$$

$$\mu_o = 4\pi\times10^{-7}\,\tfrac{Tm}{A}$$

$$c = 3\times10^{8}\,\tfrac{m}{s}$$

$$h = 6.63\times10^{-34}Js$$

$$m_e = 9.11\times10^{-31}kg = \frac{0.511MeV}{c^2}$$

$$m_p = 1.67\times10^{-27}kg = \frac{937.1MeV}{c^2}$$

$$m_n = 1.69\times10^{-27}kg = \frac{948.3MeV}{c^2}$$

$$1amu = 1.66\times10^{-27}kg = \frac{931.5MeV}{c^2}$$

$$N_A = 6.02\times10^{23}$$

$$Ax^2 + Bx + C = 0 \rightarrow x = \frac{-B\pm\sqrt{B^2-4AC}}{2A}$$

Electric Circuits

$$I = \frac{\Delta Q}{\Delta t}$$

$$V = IR = I\left(\frac{\rho L}{A}\right)$$

$$R_{series} = \sum_{i=1}^{N} R_i$$

$$\frac{1}{R_{parallel}} = \sum_{i=1}^{N}\frac{1}{R_i}$$

$$P = IV = I^2R = \frac{V^2}{R}$$

$$Q = CV = \left(\frac{\kappa\varepsilon_0 A}{d}\right)V = (\kappa C_0)V$$

$$W = U = \tfrac{1}{2}QV = \tfrac{1}{2}CV^2 = \frac{Q^2}{2C}$$

$$Q_{\text{charge}}(t) = Q_{\max}\left(1 - e^{-\frac{t}{RC}}\right)$$

$$Q_{\text{discharge}}(t) = Q_{\max}e^{-\frac{t}{RC}}$$

$$C_{parallel} = \sum_{i=1}^{N} C_i$$

$$\frac{1}{C_{series}} = \sum_{i=1}^{N}\frac{1}{C_i}$$

Light as a Particle & Relativity

$$E = hf = \frac{hc}{\lambda} = pc$$

$$KE_{\max} = hf - \phi = eV_{stop}$$

$$\Delta\lambda = \frac{h}{m_e c}(1-\cos\phi)$$

$$\gamma = \frac{1}{\sqrt{1-\frac{v^2}{c^2}}}$$

$$p = \gamma mv$$

$$E_{total} = KE + E_{rest} = \gamma mc^2$$

$$E_{total}^2 = p^2c^2 + m^2c^4$$

$$E_{rest} = mc^2$$

$$KE = (\gamma - 1)mc^2$$

Geometry

Circles: $C = 2\pi r = \pi D \qquad A = \pi r^2$

Triangles: $A = \tfrac{1}{2}bh$

Spheres: $A = 4\pi r^2 \qquad V = \tfrac{4}{3}\pi r^3$

Light as a Wave

$$c = f\lambda = \frac{1}{\sqrt{\varepsilon_o\mu_o}}$$

$$S(t) = \frac{energy}{time\times area} = c\varepsilon_o E^2(t) = c\frac{B^2(t)}{\mu_0}$$

$$I = S_{avg} = \tfrac{1}{2}c\varepsilon_o E_{\max}^2 = c\frac{B_{\max}^2}{2\mu_0}$$

$$P = \frac{S}{c} = \frac{Force}{Area}$$

$$S = S_o\cos^2\theta$$

$$v = \frac{1}{\sqrt{\varepsilon\mu}} = \frac{c}{n}$$

$$\theta_{inc} = \theta_{refl}$$

$$n_1\sin\theta_1 = n_2\sin\theta_2$$

$$\frac{1}{f} = \frac{1}{d_o} + \frac{1}{d_i}$$

$$M = \frac{h_i}{h_o} = -\frac{d_i}{d_o}$$

$$M_{total} = \prod_{i=1}^{N} M_i$$

$$d\sin\theta = m\lambda \text{ or } (m+\tfrac{1}{2})\lambda$$

$$a\sin\phi = m'\lambda$$

Nuclear Physics

$$E_{binding} = (Zm_p + Nm_n - m_{rest})c^2$$

$$\frac{\Delta N}{\Delta t} = -\lambda N_o \rightarrow N(t) = N_o e^{-\lambda t}$$

$$A(t) = A_o e^{-\lambda t}$$

$$m(t) = m_o e^{-\lambda t}$$

$$t_{\frac{1}{2}} = \frac{\ln 2}{\lambda}$$

Misc. Physics 110 Formulae

$$\vec{F} = \frac{\Delta\vec{p}}{\Delta t} = \frac{\Delta(mv)}{\Delta t} = m\vec{a}$$

$$\vec{F} = -k\vec{y}$$

$$\vec{F}_C = m\frac{v^2}{R}\hat{r}$$

$$W = \Delta KE = \tfrac{1}{2}m\left(v_f^2 - v_i^2\right) = -\Delta PE$$

$$PE_{gravity} = mgy$$

$$PE_{spring} = \tfrac{1}{2}ky^2$$

$$x_f = x_i + v_{ix}t + \tfrac{1}{2}a_x t^2$$

$$v_{fx} = v_{ix} + a_x t$$

$$v_{fx}^2 = v_{ix}^2 + 2a_x\Delta x$$