Physics 111

Exam #2

October 16, 2015

Name_____

Please read and follow these instructions carefully:

- Read all problems carefully before attempting to solve them.
- Your work must be legible, and the organization clear.
- You must show all work, including correct vector notation.
- You will not receive full credit for correct answers without adequate explanations.
- You will not receive full credit if incorrect work or explanations are mixed in with correct work. So erase or cross out anything you don't want graded.
- Make explanations complete but brief. Do not write a lot of prose.
- Include diagrams.
- Show what goes into a calculation, not just the final number. For example $|\vec{p}| \approx m|\vec{v}| = (5kg) \times (2\frac{m}{s}) = 10\frac{kg \cdot m}{s}$
- Give standard SI units with your results unless specifically asked for a certain unit.
- Unless specifically asked to derive a result, you may start with the formulas given on the formula sheet including equations corresponding to the fundamental concepts.
- Go for partial credit. If you cannot do some portion of a problem, invent a symbol and/or value for the quantity you can't calculate (explain that you are doing this), and use it to do the rest of the problem.
- All multiple choice questions are worth 3 points and each free-response part is worth 10 points

Problem #1	/26
Problem #2	/26
Problem #3	/26
Total	/78

I affirm that I have carried out my academic endeavors with full academic honesty.

_____

1. Consider the following circuit containing some resistors each $R = 100\Omega$ connected to a $24V$ battery.

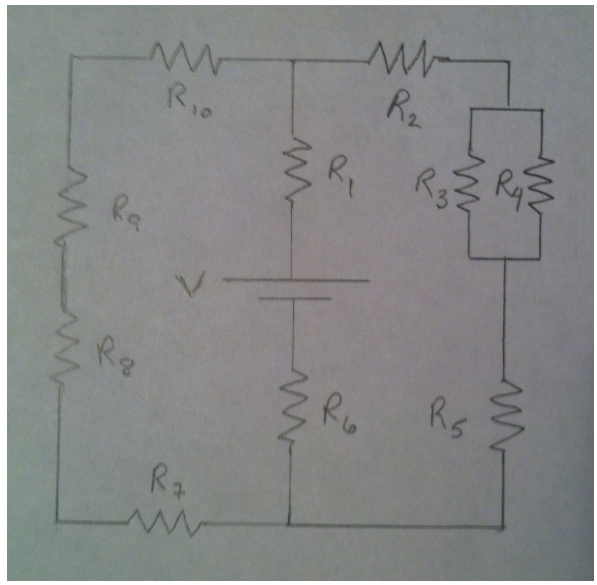

a. What is the total current I_{total} produced by the battery?

Resistors R_7, R_8, R_9, & R_{10} are in series so their resistance is
$R_{78910} = R_7 + R_8 + R_9 + R_{10} = 4(100\Omega) = 400\Omega$.

Resistors R_3 and R_4 are in parallel and their resistance is
$$\frac{1}{R_{34}} = \frac{1}{R_3} + \frac{1}{R_4} = \frac{2}{100\Omega} \rightarrow R_{34} = 50\Omega .$$
Resistors R_2, R_{34}, & R_5 are in series so their resistance is
$R_{2345} = R_2 + R_{34} + R_5 = 2(100\Omega) + 50\Omega = 250\Omega$
Resistors R_{78910} and R_{2345} are in parallel and their resistance is
$$\frac{1}{R_{234578910}} = \frac{1}{R_{2345}} + \frac{1}{R_{78910}} = \frac{1}{250\Omega} + \frac{1}{400\Omega} \rightarrow R_{234578910} = 153.9\Omega .$$
Resistors R_1, R_6, $R_{234578910}$ and are in series and this will define the equivalent resistance. Thus the equivalent resistance is $R_{eq} = 353.9\Omega$ and the total current by Ohm's law is $I_{total} = \frac{V}{R_{eq}} = \frac{24V}{353.9\Omega} = 0.068A = 68mA$.

b. What is the potential drop across resistor R_4?

The potential drop across R_1 and R_6 are the same and is $V_1 = V_6 = I_{total}R_1 = 0.068A \times 100\Omega = 6.8V$. Thus the potential drop across resistor R_{2345} is $24V - 2(6.8V) = 10.4V$. The current that flows in this right branch is $I_{2345} = \frac{V_{2345}}{R_{2345}} = \frac{10.4V}{250\Omega} = 0.0416A = 41.6A$. Since all resistors have the same value, the current will split evenly between R_3 and R_4. Thus we calculate the potential drop as $V_4 = I_4R_4 = \left(\frac{0.0416A}{2}\right) \times 100\Omega = 2.08V$.

c. The current that flows through resistor R_7 is

1. The same as I_{total}.
2. less than the current through resistor R_2.
3. greater than the current through resistor R_2.
4. equal to the current through resistor R_6.

d. Suppose that you decided to rewire the circuit above and to look like the circuit below where all the resistors have the same resistance ($R = 100\Omega$) and the same $24V$ battery is used. Compared to the total current produced by the battery I_{total} in the original circuit, the total current produced by the battery I'_{total} in this new circuit

1. is greater than I_{total}.
2. is less than I_{total}.
3. is equal to I_{total}.
4. cannot be determined since it could be greater or less than I_{total} depending on how the equivalent resistance changes.

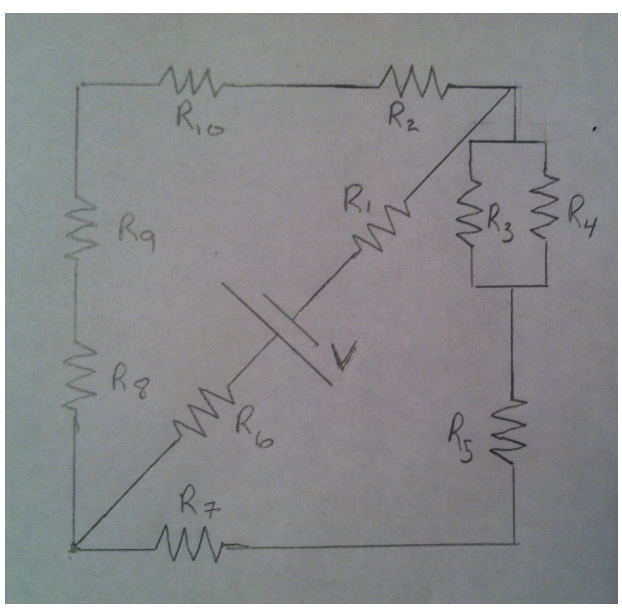

2. In the table below there is data on some selected elements as well as some of their isotopes (same element but with differing numbers of neutrons). The masses for each element/isotope are given in atomic mass units where $1u = 1.66 \times 10^{-27}\,kg$.

Element	${}^{12}_{6}C$	${}^{13}_{6}C$	${}^{14}_{6}C$	${}^{14}_{7}N$	${}^{15}_{8}O$	${}^{16}_{8}O$
Atomic mass (u)	12.0000	13.0036	14.0032	14.0031	15.0031	15.9949
q/m	0.500	0.462	0.429	0.500	0.533	0.500

A mass spectrometer is a device used to determine masses of unknown elements, molecules or compounds based on how those masses bend in a magnetic field. Consider the mass spectrometer shown below in which positively charged ions are accelerated from rest through a potential difference ΔV_1. These particles acquire a speed v (the red arrow) and then they are incident on a region containing crossed electric (orange arrows) and magnetic (blue dots) fields, called a velocity selector. This region of crossed electric and magnetic fields selects out particles of a specific speed. At the end of the velocity selection region the particles enter a region of space in which there is only a magnetic field and when the charges interact with the magnetic field, the magnetic force changes the direction of the charges velocity and they strike a detector. Measurements of the mass of the particle can be determined by measuring the horizontal distance where the charge strikes the detector

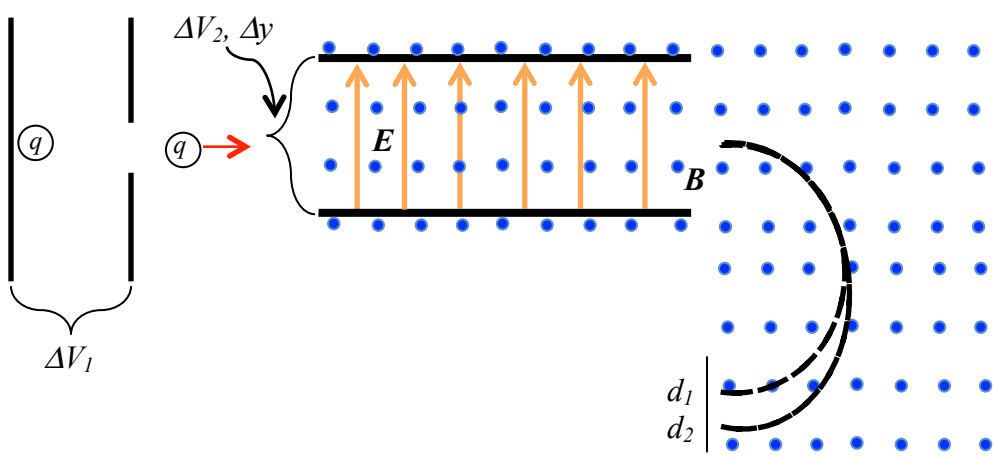

a. Suppose that two unknown elements from the table above (both of which are fully ionized, meaning they have had all of their electrons stripped from them) are passed through the velocity selector with a potential difference of $\Delta V_2 = V_2 = 25V$ magnetic field $B = 17.5T$ and that the two ions are observed to strike a detector located at distances $d_1 = 3.538m$ of and $d_2 = 3.816m$ respectively. What is the identity of the two ion species and which ion species struck the detector at these two locations? That is, what ion struck d_1 at and which ion struck at d_2 ? Assume that the plate separation for both ion species $\Delta y = y = 10cm$ and that both ions are traveling the same speed v when they enter the region of crossed electric and magnetic fields.

In the region of magnetic field only, the charge feels a magnetic force given by $F_B = qvB = ma = m\frac{v^2}{R}$. The speed is determined in the velocity selector. Here the electric and magnetic forces on the charge vanishes allowing the charge to travel at a constant speed through the velocity selector region. We have

$$F_E - F_B = ma = 0 \rightarrow F_E = F_B \rightarrow qE = qvB$$

$$\therefore v = \frac{E}{B} = \frac{\Delta V_2}{B\Delta y} = \frac{V_2}{yB}$$

Here we don't know which mass (or it's charge) that is being accelerated in the magnetic field only region but we can calculate its charge to mass ratio. The charge to mass ratio is: $\frac{q}{m} = \frac{v}{RB} = \frac{V_2}{yRB^2} = \frac{2V_2}{ydB^2}$

For each distance given we find

$$\left(\frac{q}{m}\right)_2 = \frac{2V_2}{yd_2B^2} = \frac{2\times 25V}{0.1m\times 3.816m\times(17.5T)^2} = 0.428 \text{ which corresponds to } {}^{14}_{6}C \text{ and}$$

$$\left(\frac{q}{m}\right)_1 = \frac{2V_2}{yd_1B^2} = \frac{2\times 25V}{0.1m\times 3.538m\times(17.5T)^2} = 0.462 \text{ which corresponds to } {}^{13}_{6}C$$

comparing with the table above.

b. Suppose you wanted to detect say ${}^{19}_{9}F$. Assuming that they are singly charged ions (keeping everything else about the system the same) you would have to move the detector

1. to a smaller d closer to the exit but on the same side.
2. to a larger d farther from the exit but on the same side.
3. to a distance d somewhere between the first two charges locations d_1 and d_2 and on the same side.
4. to a point above the exit rather than below the exit.

c. Suppose that instead of the mass spectrometer you had two long straight wires oriented as shown below. There is a current I that runs through each wire and the lower wire is fixed in position but the upper wire is free to move. Attached to the upper wire is a pan with some masses and when the current I flows a distance d called the equilibrium separation separates the two wires. Suppose that the current in each wire were increased by a factor of 2,

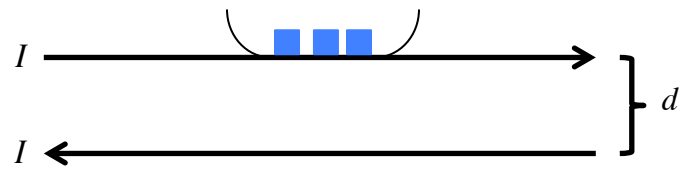

1. mass would have to be added to the pan to make the wires return to the equilibrium separation distance d.
2. mass would have to be removed from the pan to make the wires return to the equilibrium separation distance d.
3. no mass would have to be added to or removed from the pan to make the wires return to the equilibrium separation distance d.
4. it would not be able to be determined if mass should be added to or removed from the pan to make the wires return to the equilibrium separation distance d.

d. Suppose that a third wires (colored blue) was placed at the midpoint between the upper and lower wires (both of which are fixed in position and cannot move) as shown below. The current in this third wire is flowing from left to right. If this wires has a current one-half that of the current in the upper and lower wires original current, what is the net force on this third wire due to the currents flowing in the upper and lower wires?

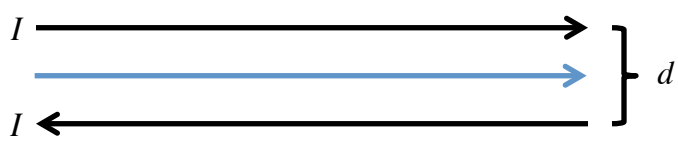

The net force on the wire in magnitude is given by $F_{net} = IlB_{net}$ where B_{net} is the net magnetic field at the midpoint between the two wires. This magnetic field is calculated from $B_{net} = B_1 + B_2 = \frac{\mu_0 I_1}{2\pi r_1} + \frac{\mu_0 I_2}{2\pi r_2} = 2\left(\frac{\mu_0 I}{2\pi r}\right) = \frac{\mu_0 I}{\pi \frac{d}{2}} = \frac{2\mu_0 I}{\pi d}$ where both are directed into the page by the RHR. Thus the net force in magnitude is $F_{net} = \frac{IlB_{net}}{2} = \frac{I}{2} l\left(\frac{2\mu_0 I}{\pi d}\right) = \frac{\mu_0 l I^2}{\pi d}$ and the direction is upward by the RHR.

3. Consider the following device. A rectangular U-shaped wire with a light bulb at one the left end has a small rod with dimensions $1cm \times 1cm \times 80cm$ and mass $m = 250g$ at rest on the rails of the U-shaped wire. Attached to the rod is a light string that passes over a low-mass pulley and at the other end of the string a mass $M = 1kg$ is suspended. The system starts from rest and the U-shaped rails are placed in an external magnetic field of strength $B = 0.25T$ and the magnetic field is perpendicular to the plane of the U-shaped rails. Assume the bar is made out of copper with a resistivity $\rho = 1.7 \times 10^{-8} \Omega m$.

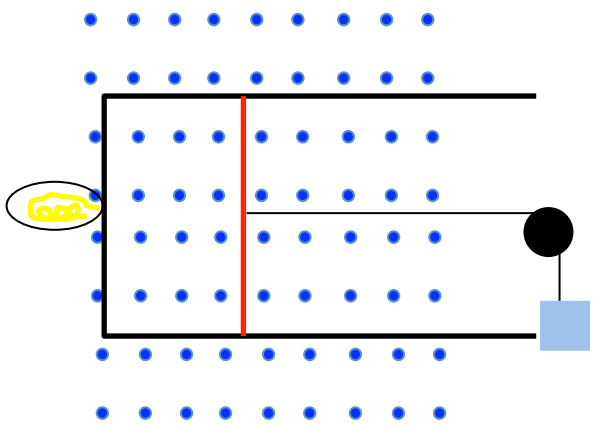

Top View

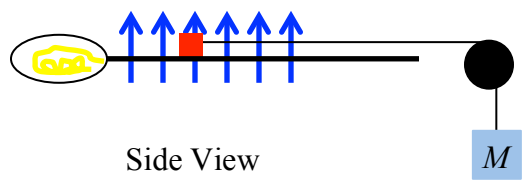

Side View

a. If the bar were released from rest and allowed to slide across the rails at a constant speed, the current in the light bulb would
   1. flow CW and be constant in time.
   2. flow CW and increase with time.
   3. flow CW and decrease with time.
   4. flow CCW and be constant in time.
   5. flow CCW and increase with time.
   6. flow CCW and decrease in time.

b. If the bar slides across the rails at constant speed, determine the energy dissipated across the light bulb every second.

Here we need to calculate the power. The power is given by $P = I^2 R$, where the resistance is $R = \frac{\rho l}{A} = \frac{1.7\times10^{-8}\,\Omega m \times 0.8m}{0.01m \times 0.01m} = 1.36\times10^{-4}\,\Omega$. The current in the bar is determined from the forces that act on the bar. The forces that act on the bar are the tension force in the string and the induced magnetic force from the changing magnetic flux. Since the bar slides at constant speed, the tension force can be found from the falling mass. Here, $\sum F_y : F_T - Mg = Ma = 0 \rightarrow F_T = Mg$. The current then is

$$\sum F_x : F_T - F_B = ma = 0 \rightarrow F_T = F_B \rightarrow Mg - IlB = 0 \rightarrow Mg = IlB$$

$$\therefore I = \frac{Mg}{lB} = \frac{1kg \times 9.8\,\frac{m}{s^2}}{0.8\times0.25T} = 49A$$

Lastly, the power is $P = I^2 R = (49A)^2 \times 1.36\times10^{-4}\,\Omega = 0.327W$.

c. At what constant speed does the bar slide across the rails?

Since the bar moves at constant speed the tension force in the string will equal the induced force on the bar due to the change in magnetic flux. We have:

$$\sum F_x : F_T - F_B = ma = 0 \rightarrow F_T = F_B \rightarrow Mg = IlB = \frac{\varepsilon}{R} lB = \frac{Blv}{R} lB = \frac{B^2 l^2 v}{R}$$

$$\therefore v = \frac{MgR}{B^2 l^2} = \frac{1kg \times 9.8\,\frac{m}{s^2} \times 1.36\times10^{-4}\,\Omega}{(0.25T \times 0.8m)^2} = 0.033\,\frac{m}{s}$$

d. Suppose that you removed the hanging mass and instead of allowing the bar to slide to the right, you give it a small kick to the left. Which of the following quantities, if any, would change?

1. The current in the bar would change direction.
2. The bar would move to the left at a constant speed.
3. The magnetic force on the bar would be constant.
4. The magnetic force on the bar would not be constant.
5. The magnetic field would decrease with time.

Physics 111 Equation Sheet

Electric Forces, Fields and Potentials

$$\vec{F} = k\frac{Q_1Q_2}{r^2}\hat{r}$$

$$\vec{E} = \frac{\vec{F}}{q}$$

$$\vec{E}_Q = k\frac{Q}{r^2}\hat{r}$$

$$PE = k\frac{Q_1Q_2}{r}$$

$$V(r) = k\frac{Q}{r}$$

$$E_x = -\frac{\Delta V}{\Delta x}$$

$$W = -q\Delta V$$

Magnetic Forces and Fields

$$F = qvB\sin\theta$$

$$F = IlB\sin\theta$$

$$\tau = NIAB\sin\theta = \mu B\sin\theta$$

$$PE = -\mu B\cos\theta$$

$$B = \frac{\mu_0 I}{2\pi r}$$

$$\varepsilon_{induced} = -N\frac{\Delta\phi_B}{\Delta t} = -N\frac{\Delta(BA\cos\theta)}{\Delta t}$$

Constants

$g = 9.8\,\frac{m}{s^2}$

$1e = 1.6\times10^{-19}C$

$k = \frac{1}{4\pi\varepsilon_o} = 9\times10^9\,\frac{Nm^2}{C^2}$

$\varepsilon_o = 8.85\times10^{-12}\,\frac{C^2}{Nm^2}$

$1eV = 1.6\times10^{-19}J$

$\mu_o = 4\pi\times10^{-7}\,\frac{Tm}{A}$

$c = 3\times10^8\,\frac{m}{s}$

$h = 6.63\times10^{-34}Js$

$m_e = 9.11\times10^{-31}kg = \frac{0.511MeV}{c^2}$

$m_p = 1.67\times10^{-27}kg = \frac{937.1MeV}{c^2}$

$m_n = 1.69\times10^{-27}kg = \frac{948.3MeV}{c^2}$

$1amu = 1.66\times10^{-27}kg = \frac{931.5MeV}{c^2}$

$N_A = 6.02\times10^{23}$

$Ax^2 + Bx + C = 0 \rightarrow x = \frac{-B\pm\sqrt{B^2-4AC}}{2A}$

Electric Circuits

$$I = \frac{\Delta Q}{\Delta t}$$

$$V = IR = I\left(\frac{\rho L}{A}\right)$$

$$R_{series} = \sum_{i=1}^{N} R_i$$

$$\frac{1}{R_{parallel}} = \sum_{i=1}^{N}\frac{1}{R_i}$$

$$P = IV = I^2R = \frac{V^2}{R}$$

$$Q = CV = \left(\frac{\kappa\varepsilon_0 A}{d}\right)V = (\kappa C_0)V$$

$$PE = \tfrac{1}{2}QV = \tfrac{1}{2}CV^2 = \frac{Q^2}{2C}$$

$$Q_{\text{charge}}(t) = Q_{\max}\left(1-e^{-\frac{t}{RC}}\right)$$

$$Q_{\text{discharge}}(t) = Q_{\max}e^{-\frac{t}{RC}}$$

$$C_{parallel} = \sum_{i=1}^{N} C_i$$

$$\frac{1}{C_{series}} = \sum_{i=1}^{N}\frac{1}{C_i}$$

Light as a Particle & Relativity

$$E = hf = \frac{hc}{\lambda} = pc$$

$$KE_{\max} = hf - \phi = eV_{stop}$$

$$\Delta\lambda = \frac{h}{m_e c}(1-\cos\phi)$$

$$\gamma = \frac{1}{\sqrt{1-\frac{v^2}{c^2}}}$$

$$p = \gamma mv$$

$$E_{total} = KE + E_{rest} = \gamma mc^2$$

$$E_{total}^2 = p^2c^2 + m^2c^4$$

$$E_{rest} = mc^2$$

$$KE = (\gamma-1)mc^2$$

Geometry

Circles: $C = 2\pi r = \pi D \qquad A = \pi r^2$

Triangles: $A = \tfrac{1}{2}bh$

Spheres: $A = 4\pi r^2 \qquad V = \tfrac{4}{3}\pi r^3$

Light as a Wave

$$c = f\lambda = \frac{1}{\sqrt{\varepsilon_o\mu_o}}$$

$$S(t) = \frac{energy}{time\times area} = c\varepsilon_o E^2(t) = c\frac{B^2(t)}{\mu_0}$$

$$I = S_{avg} = \tfrac{1}{2}c\varepsilon_o E_{\max}^2 = c\frac{B_{\max}^2}{2\mu_0}$$

$$P = \frac{S}{c} = \frac{Force}{Area}$$

$$S = S_o\cos^2\theta$$

$$v = \frac{1}{\sqrt{\varepsilon\mu}} = \frac{c}{n}$$

$$\theta_{inc} = \theta_{refl}$$

$$n_1\sin\theta_1 = n_2\sin\theta_2$$

$$\frac{1}{f} = \frac{1}{d_o} + \frac{1}{d_i}$$

$$M = \frac{h_i}{h_o} = -\frac{d_i}{d_o}$$

$$M_{total} = \prod_{i=1}^{N} M_i$$

$$d\sin\theta = m\lambda \text{ or } (m+\tfrac{1}{2})\lambda$$

$$a\sin\phi = m'\lambda$$

Nuclear Physics

$$E_{binding} = (Zm_p + Nm_n - m_{rest})c^2$$

$$\frac{\Delta N}{\Delta t} = -\lambda N_o \rightarrow N(t) = N_o e^{-\lambda t}$$

$$A(t) = A_o e^{-\lambda t}$$

$$m(t) = m_o e^{-\lambda t}$$

$$t_{\frac{1}{2}} = \frac{\ln 2}{\lambda}$$

Misc. Physics 110 Formulae

$$\vec{F} = \frac{\Delta\vec{p}}{\Delta t} = \frac{\Delta(mv)}{\Delta t} = m\vec{a}$$

$$\vec{F} = -k\vec{y}$$

$$\vec{F}_C = m\frac{v^2}{R}\hat{r}$$

$$W = \Delta KE = \tfrac{1}{2}m(v_f^2 - v_i^2) = -\Delta PE$$

$$PE_{gravity} = mgy$$

$$PE_{spring} = \tfrac{1}{2}ky^2$$

$$x_f = x_i + v_{ix}t + \tfrac{1}{2}a_x t^2$$

$$v_{fx} = v_{ix} + a_x t$$

$$v_{fx}^2 = v_{ix}^2 + 2a_x\Delta x$$