Physics 111

Exam #2

October 28, 2022

Name_____

Please read and follow these instructions carefully:

- Read all problems carefully before attempting to solve them.
- Your work must be legible, and the organization clear.
- You must show all work, including correct vector notation.
- You will not receive full credit for correct answers without adequate explanations.
- You will not receive full credit if incorrect work or explanations are mixed in with correct work. So erase or cross out anything you don't want graded.
- Make explanations complete but brief. Do not write a lot of prose.
- Include diagrams.
- Show what goes into a calculation, not just the final number. For example, $|\vec{p}| \approx m|\vec{v}| = (5kg) \times \left(2\frac{m}{s}\right) = 10\frac{kg \cdot m}{s}$
- Give standard SI units with your results unless specifically asked for a certain unit.
- Unless specifically asked to derive a result, you may start with the formulas given on the formula sheet including equations corresponding to the fundamental concepts.
- Go for partial credit. If you cannot do some portion of a problem, invent a symbol and/or value for the quantity you can't calculate (explain that you are doing this), and use it to do the rest of the problem.
- Each free-response part is worth 6 points.

Problem #1	/24
Problem #2	/24
Problem #3	/24
Total	/72

I affirm that I have carried out my academic endeavors with full academic honesty.

_____

1. A proton is in a box that contains an electric field $\vec{E}$. The box is in the Earth's magnetic field ($B_{Earth} = 5.2 \times 10^{-5} T$) which points north, and the proton moves up away from the Earth's surface with a speed $v = 7.2 \times 10^{6} \frac{m}{s}$.

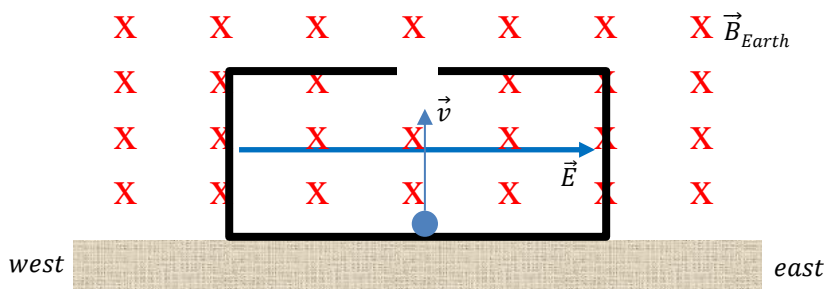

a. In the box above, draw the direction of the electric field inside of the box so that there is no change in the trajectory of the proton as it moves upward in the box. To earn full credit, explain why you drew the electric field as you did.

By the RHR the magnetic force is to the west. Therefore, to keep the proton moving up away from the earth, the electric force must point east. Since we have a proton and it feels a force in the direction of the electric field, the electric field must also point east.

b. What is the magnitude of the electric field inside of the box while the proton in moving upwards away from the Earth's surface?

$F_x: \; -F_B + F_E = 0 \rightarrow -evB + eE = 0$
$\rightarrow E = vB = 7.2 \times 10^{6} \frac{m}{s} \times 5.2 \times 10^{-5} T = 374.4 \frac{N}{C}$

c. When the proton leaves the box through the hole in the upper surface, the proton is subject only to the Earth's magnetic field. Which way does the proton move in the magnetic field and what is the radius of its orbit?

By the RHR, the magnetic force is to the west, so the proton moves in a circle of radius R initially toward the west.

$$F_B = qvB\sin\theta = evB\sin\theta = ma_c = m\frac{(v\sin\theta)^2}{R} \rightarrow R = \frac{mv\sin\theta}{eB}$$

$$R = \frac{1.67\times10^{-27}kg\times7.2\times10^{6}\frac{m}{s}\times\sin 90}{1.6\times10^{-19}C\times5.2\times10^{-5}T} = 1445.2m$$

d. When the proton is in the magnetic field only region it takes the proton a time T to complete one full orbit through the magnetic field at speed v. Suppose that a second proton were given an initial speed of $2v$ and this second proton moves upward away from the Earth's surface through the box and out of the hole at the upper surface. To get this second proton out, what would have to happen to the magnitude and direction of the electric field inside of the box and when the proton leaves the box and enters the magnetic field only region, what is its new orbital period in terms of T?

Since $E = vB$ (by equating the electric and magnetic forces as in part a), and since $B$is constant in magnitude and direction, if v increases by a factor of 2, so too does the electric field E in magnitude. The direction of the electric field E remains unchanged.

The original orbital period T is $v = \frac{2\pi R}{T} \rightarrow T = \frac{2\pi R}{v} = \frac{2\pi R}{v} = \frac{2\pi R}{\frac{eBR}{m}} = \frac{2\pi m}{eB}$

Where, the speed is determined from the magnetic force: $F_B = evB = m\frac{v^2}{R} \rightarrow$ $v = \frac{eRB}{m}$.

The new orbital period T' is $v' = \frac{2\pi R'}{T'} \rightarrow T' = \frac{2\pi R'}{v'} = \frac{4\pi R}{2v} = \frac{2\pi}{\frac{eBR}{m}} = \frac{2\pi m}{eB}$

Where, the new orbital radius is determined from the magnetic force:

$F_B = ev'B = m\frac{v'^2}{R'} \rightarrow R' = \frac{mv'}{eB} = \frac{2mv}{eB} = 2R.$

2. Red light from a laser ($\lambda_{red} = 632nm$) is incident from the air onto a block of material of unknown index of refraction n_m as shown below.

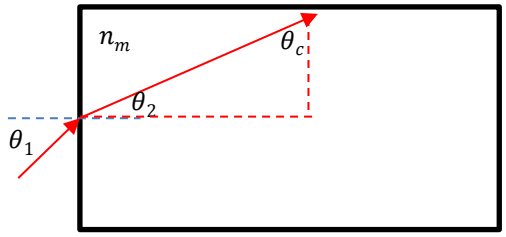

a. If the laser has a maximum power output of $200W$ and makes a circular spot $3mm$ in diameter on the materials surface, what are the maximum values of the electric and magnetic fields in the laser light?

$$S = \frac{P}{A} = \frac{1}{2}c\varepsilon_0 E_{max}^2 \rightarrow E_{max} = \sqrt{\frac{2P}{c\varepsilon_0 A}} = \sqrt{\frac{2\times 200W}{3\times 10^8\frac{m}{s}\times 8.85\times 10^{-12}\frac{C^2}{Nm^2}\times\pi(1.5\times 10^{-3})^2}}$$

$$E_{max} = 1.46\times 10^5\frac{N}{C}$$

$$E_{max} = cB_{max} \rightarrow B_{max} = \frac{E_{max}}{c} = \frac{1.46\times 10^5\frac{N}{C}}{3\times 10^8\frac{m}{s}} = 4.9\times 10^{-4}T$$

b. Suppose that the laser light is incident on the material at an angle $\theta_1 = 60^0$ measured with respect to the normal to the surface of the material. If the laser light is totally internally reflected from the upper surface, what is the critical angle between the air/material interface? Hint: You will need $\sin(A-B) = \sin A\cos B - \cos A\sin B$.

Left surface: $n_{air}\sin\theta_1 = n_{material}\sin\theta_2$
Upper surface: $n_{material}\sin\theta_c = n_{air}\sin 90 = 1$

$\theta_2 + \theta_c = 90^0$
$\rightarrow \sin\theta_2 = \sin(90-\theta_c) = \sin 90\cos\theta_c - \cos 90\sin\theta_c = \cos\theta_c$

$n_{air}\sin\theta_1 = n_{material}\sin\theta_2 = n_{material}\cos\theta_c$

$$\tan\theta_c = \frac{n_{material}\sin\theta_c}{n_{material}\cos\theta_c} = \frac{1}{n_{air}\sin\theta_1} = \frac{1}{1.00\sin 64} = 1.1126 \rightarrow \theta_c = 48.1^0$$

c. What is the index of refraction of the material?

$$n_{material} \sin\theta_c = 1 \rightarrow n_{material} = \frac{1}{\sin\theta_c} = \frac{1}{\sin 48.1} = 1.34$$

d. When the light strikes the material, some of the light is reflected from the surface of the material and some of it is transmitted into the material. What is the frequency, wavelength and speed of the light that gets transmitted into the material?

$$f_{material} = f_{air} = f = \frac{c}{\lambda_{air}} = \frac{3\times10^{8}\frac{m}{s}}{632\times10^{-9}m} = 4.75\times10^{14}s^{-1}$$

$$v_{material} = \frac{c}{n_{material}} = \frac{3\times10^{8}\frac{m}{s}}{1.34} = 2.24\times10^{8}\frac{m}{s}$$

$$\lambda_{material} = \frac{\lambda_{air}}{n_{material}} = \frac{v_{material}}{f} = \frac{2.24\times10^{8}\frac{m}{s}}{4.75\times10^{14}s^{-1}} = 4.72\times10^{-7}m$$

$$\lambda_{material} = 471.6nm$$

3. A resistor R, uncharged parallel-plate capacitor C, and a battery V are connected to an open switch S as shown below.

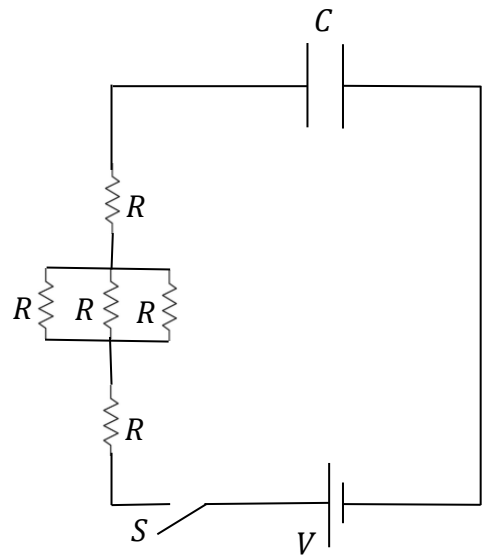

   a. The resistance of each resistor in the circuit is $R = 100k\Omega$ and the resistors and capacitor are connected to a $V = 6700V$ battery. When the switch S is closed the capacitor begins to charge. Between the plates of the capacitor there is a $0.2\mu m$ piece of material with a dielectric constant $\kappa = 210$. If the time constant of the circuit is needed to be $\tau = 0.5hr$, what is the area A of a plate in the capacitor?

$$R_{eq} = R + R + \left(\frac{1}{R} + \frac{1}{R} + \frac{1}{R}\right)^{-1} = 2R + \frac{R}{3} = \frac{7}{3}R = \frac{7}{3} \times 100k\Omega = 233.3k\Omega$$

$$\tau = R_{eq}C \rightarrow C = \frac{\tau}{R_{eq}} = \frac{0.5hr \times \frac{3600s}{1hr}}{233.3 \times 10^3\Omega} = 0.0077F = 7.7 \times 10^{-3}F$$

$$C = \frac{\kappa\varepsilon_0 A}{d} \rightarrow A = \frac{Cd}{\kappa\varepsilon_0} = \frac{7.7 \times 10^{-3}F \times 0.2 \times 10^{-6}m}{210 \times 8.85 \times 10^{-12}\frac{C^2}{Nm^2}} = 0.83m^2$$

b. Measurements of the current in the circuit show that the current varies in time as the capacitor charges according to $I = I_{max}e^{-\frac{t}{R_{eq}C}}$ and the right-hand side of the circuit passes through a pair of circular poles of a magnet $5cm$ in diameter with a strength $B = 1.5T$. At a time $t = 3\tau$, where τ is the time constant of the circuit, what is the magnetic force on the right-hand side of the wire?

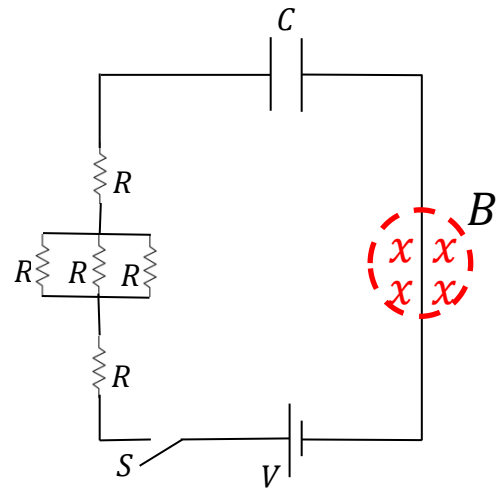

$$I = I_{max}e^{-\frac{t}{R_{eq}C}} = \frac{V_{max}}{R_{eq}}e^{-\frac{3\tau}{\tau}} = \frac{6700V}{233.3\times10^3\Omega}e^{-3}$$
$$I = 0.00143A = 1.43mA$$
$$F_B = ILB = 0.00143A \times 0.05m \times 1.5T$$
$$F_B = 1.1 \times 10^{-4}N \text{ to the right}$$

c. At a time $t = 3\tau$, what is the power dissipated across all the resistors in the circuit if the current is again given by $I = I_{max}e^{-\frac{t}{R_{eq}C}}$?

$$I_{max} = \frac{V_{max}}{R_{eq}} = \frac{6700V}{233.3 \times 10^3\Omega} = 0.0287A$$
$$P = \left(I_{max}e^{-\frac{t}{R_{eq}C}}\right)^2 R_{eq} = (0.0287e^{-6}A)^2 \times 233.3 \times 10^3\Omega = 0.476\text{W}$$

Or, $$V = V_{max}\left(1 - e^{-\frac{t}{R_{eq}C}}\right) = V_{max}\left(1 - e^{-\frac{3\tau}{\tau}}\right) = 0.95V_{max}$$
$$V_{max} = V_C + V_R \rightarrow V_R = V_{max} - 0.95V_{max} = 0.05V_{max}$$
$$P = \frac{V^2}{R_{eq}} = \frac{(0.05V_{max})^2}{R_{eq}} = \frac{(0.05\times6700V)^2}{233.3\times10^3\Omega} = 0.480W$$

Or, $P = IV = 0.00143A \times 0.05 \times 6700V = 0.479W$

The differences between each method are due to rounding.

d. Suppose that the magnet is removed from the right-hand side of the circuit and that a $N = 300$ turn coil of nickel wire $\left(\rho_{Ni} = 8908\frac{kg}{m^3}, M_{Ni} = 59\frac{g}{mol}, \rho = 6.99 \times 10^{-8}\Omega m\right)$ with loop radius $r_{loop} = 0.25cm$ is placed a distance $1m$ to the right of the right-hand side of the circuit as shown below. If the resistance of the nickel wire loop is 2Ω, what are the magnitude and direction of the induced current in the wire loop over a time interval $0 \leq t \leq 3\tau$ after the switch is closed and the uncharged capacitor begins to charge. You may assume that the right-hand side wire is very long and that only the current flowing through it contributes to the magnetic flux through the loop.

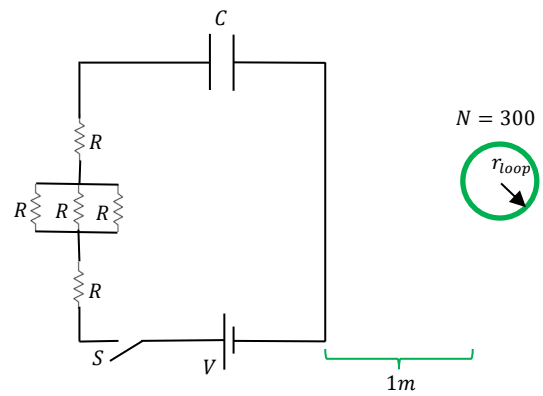

$$I(t) = I_{max}e^{-\frac{t}{R_{eq}C}} \rightarrow I_i(0) = I_{max}e^0 = \frac{V_{max}}{R_{eq}} = \frac{6700V}{233.3 \times 10^3\Omega} = 0.0287A$$

$$B_i = \frac{\mu_0 I_i}{2\pi r} = \frac{4\pi \times 10^{-7}\frac{Tm}{A} \times 0.0287A}{2\pi \times 1m} = 5.74 \times 10^{-9}T$$

$$I(t) = I_{max}e^{-\frac{t}{R_{eq}C}} \rightarrow I_f(3\tau) = I_{max}e^{-3} = 0.0287e^{-3}A = 0.00143A$$

$$B_f = \frac{\mu_0 I_f}{2\pi r} = \frac{4\pi \times 10^{-7}\frac{Tm}{A} \times 0.00143A}{2\pi \times 1m} = 2.86 \times 10^{-11}T$$

$$I = \frac{\varepsilon}{R_{eq}} = \left|-\frac{NA\cos\theta}{R}\frac{\Delta B}{\Delta t}\right| = \left|\frac{300 \times \pi\left(0.25 \times 10^{-2}m\right)^2}{2\Omega} \times \frac{2.86 \times 10^{-11}T - 5.74 \times 10^{-9}T}{3 \times 0.5hr \times \frac{3600s}{1hr}}\right|$$

$I = 3.1 \times 10^{-17}A$ counterclockwise to undo the change in magnetic flux (which is decreasing in time since the current is decreasing in time.)

Physics 111 Formula Sheet

Electrostatics

$F = k\frac{q_1 q_2}{r^2}$

$\vec{F} = q\vec{E}; \quad E_{pc} = k\frac{q}{r^2}; \quad E_{plate} = \frac{q}{\epsilon_0 A}$

$E = -\frac{\Delta V}{\Delta x}$

$V = k\frac{q}{r}$

$U_e = k\frac{q_1 q_2}{r} = qV$

$W = -q\Delta V = -\Delta U_e = \Delta K$

Magnetism

$\vec{F} = q\vec{v} \times \vec{B} \rightarrow F = qvB\sin\theta$

$\vec{F} = I\vec{L} \times \vec{B} \rightarrow F = ILB\sin\theta$

$V_{Hall} = wv_d B$

$B = \frac{\mu_0 I}{2\pi r}$

$\varepsilon = \Delta V = -N\frac{\Delta\phi_B}{\Delta t}$

$\phi_B = BA\cos\theta$

Electric Circuits - Capacitors

$Q = CV; \quad C = \frac{\kappa\epsilon_0 A}{d}$

$C_{parallel} = \sum_{i=1}^{N} C_i$

$\frac{1}{C_{series}} = \sum_{i=1}^{N}\frac{1}{C_i}$

$Q_{charging}(t) = Q_{max}\left(1 - e^{-\frac{t}{\tau}}\right)$

$Q_{discharging}(t) = Q_{max}e^{-\frac{t}{\tau}}$

$I(t) = I_{max}e^{-\frac{t}{\tau}} = \frac{Q_{max}}{\tau}e^{-\frac{t}{\tau}}$

$\tau = RC$

$U_C = \frac{1}{2}qV = \frac{1}{2}CV^2 = \frac{Q^2}{2C}$

Electric Circuits - Resistors

$I = \frac{\Delta Q}{\Delta t}$

$I = neAv_d; \quad n = \frac{\rho N_A}{m}$

$V = IR$

$R = \frac{\rho L}{A}$

$R_{series} = \sum_{i=1}^{N} R_i$

$\frac{1}{R_{parallel}} = \sum_{i=1}^{N}\frac{1}{R_i}$

$P = \frac{\Delta E}{\Delta t} = IV = I^2 R = \frac{V^2}{R}$

Light as a Wave

$c = f\lambda$

$S(t) = \frac{\text{Energy}}{\text{time}\times\text{Area}} = c\epsilon_0 E^2(t) = c\frac{B^2(t)}{\mu_0}$

$I = S_{avg} = \frac{1}{2}c\epsilon_0 E_{max}^2 = c\frac{B_{max}^2}{2\mu_0}$

$P = \begin{cases} \frac{S}{c}; & \text{absorbed} \\ \frac{2S}{c}; & \text{reflected} \end{cases}$

$S = S_0\cos^2\theta$

$v = \frac{c}{n}$

$\theta_{\text{incident}} = \theta_{\text{reflected}}$

$n_1\sin\theta_1 = n_2\sin\theta_2$

$P = \frac{1}{f} = \frac{1}{d_0} + \frac{1}{d_i}$

$M = -\frac{d_i}{d_0}; \quad |M| = \frac{h_i}{h_0}$

Light as a Particle/Relativity

$E = hf = \frac{hc}{\lambda}$

$K_{max} = hf - \phi$

$\Delta\lambda = \lambda' - \lambda = \frac{h}{mc}(1 - \cos\phi)$

$\frac{1}{E'} = \frac{1}{E} + \frac{(1-\cos\phi)}{E_{rest}}; \quad E_{rest} = mc^2$

$\gamma = \frac{1}{\sqrt{1-\frac{v^2}{c^2}}}$

$p = \gamma mv$

$E_{total} = E_{rest} + K = \gamma mc^2$

$K = (\gamma - 1)mc^2$

$E_{total}^2 = p^2c^2 + m^2c^4$

Nuclear Physics

$N = N_0 e^{-\lambda t}$

$m = m_0 e^{-\lambda t}$

$A = A_0 e^{-\lambda t}$

$A = \lambda N$

$t_{\frac{1}{2}} = \frac{\ln 2}{\lambda}$

Constants

$g = 9.8 \frac{m}{s^2}$

$1e = 1.6 \times 10^{-19} C$

$k = \frac{1}{4\pi\epsilon_0} = 9 \times 10^9 \frac{Nm^2}{C^2}$

$\epsilon_0 = 8.85 \times 10^{-12} \frac{C^2}{Nm^2}$

$1eV = 1.6 \times 10^{-19} J$

$\mu_0 = 4\pi \times 10^{-7} \frac{Tm}{A}$

$c = 3 \times 10^8 \frac{m}{s}$

$h = 6.63 \times 10^{-34} Js = 4.14 \times 10^{-15} eVs$

$N_A = 6.02 \times 10^{23}$

$1u = 1.66 \times 10^{-27} kg = 931.5 \frac{MeV}{c^2}$

$m_p = 1.67 \times 10^{-27} kg = 937.1 \frac{MeV}{c^2}$

$m_n = 1.69 \times 10^{-27} kg = 948.3 \frac{MeV}{c^2}$

$m_e = 9.11 \times 10^{-31} kg = 0.511 \frac{MeV}{c^2}$

Physics 110 Formulas

$\vec{F} = m\vec{a}; \quad F_G = \frac{GM_1m_2}{r^2}; \quad F_s = -ky; \quad a_c = \frac{v^2}{r}$

$W = -\Delta U_g - \Delta U_s = \Delta K$

$U_g = mgy$

$U_s = \frac{1}{2}ky^2$

$K = \frac{1}{2}mv^2$

$\vec{r}_f = \vec{r}_i + \vec{v}_i t + \frac{1}{2}\vec{a}t^2$

$\vec{v}_f = \vec{v}_i + \vec{a}t$

$v_f^2 = v_i^2 + 2a_r\Delta r$

Common Metric Units

$nano\ (n) = 10^{-9}$

$micro\ (\mu) = 10^{-6}$

$milli\ (m) = 10^{-3}$

$centi\ (c) = 10^{-2}$

$kilo\ (k) = 10^{3}$

$mega\ (M) = 10^{6}$

Geometry/Algebra

Circles: $A = \pi r^2$ $\quad C = 2\pi r = \pi$

Spheres: $A = 4\pi r^2$ $\quad V = \frac{4}{3}\pi r^3$

Triangles: $A = \frac{1}{2}bh$

Quadratics: $ax^2 + bx + c = 0 \rightarrow x = \frac{-b \pm \sqrt{b^2 - 4ac}}{2a}$