Physics 111

Exam #2

February 10, 2023

Name_____

Please read and follow these instructions carefully:

- Read all problems carefully before attempting to solve them.
- Your work must be legible, and the organization clear.
- You must show all work, including correct vector notation.
- You will not receive full credit for correct answers without adequate explanations.
- You will not receive full credit if incorrect work or explanations are mixed in with correct work. So erase or cross out anything you don't want graded.
- Make explanations complete but brief. Do not write a lot of prose.
- Include diagrams.
- Show what goes into a calculation, not just the final number. For example, $|\vec{p}| \approx m|\vec{v}| = (5kg) \times \left(2\frac{m}{s}\right) = 10\frac{kg \cdot m}{s}$
- Give standard SI units with your results unless specifically asked for a certain unit.
- Unless specifically asked to derive a result, you may start with the formulas given on the formula sheet including equations corresponding to the fundamental concepts.
- Go for partial credit. If you cannot do some portion of a problem, invent a symbol and/or value for the quantity you can't calculate (explain that you are doing this), and use it to do the rest of the problem.
- Each free-response part is worth 6 points.

Problem #1	/24
Problem #2	/24
Problem #3	/24
Total	/72

I affirm that I have carried out my academic endeavors with full academic honesty.

_____

1. Some resistors, an uncharged parallel-plate capacitor C, and a battery V are connected to an open switch S as shown below. This small circuit forms part of a much larger circuit in a device. The rest of the circuit in the device does not matter for this problem.

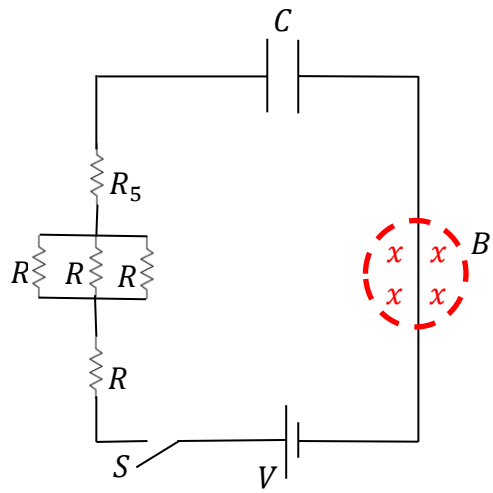

a. Suppose that the resistance of each resistor in the circuit on the right is $R = 150\Omega$ *except for* resistor R_5. The resistors are wired to a $C = 0.06F$ capacitor and the circuit is connected to a $V = 250V$ battery. When the switch S is closed the capacitor begins to charge. If the capacitor needs to be discharged, through the larger circuit not shown, when the voltage across the capacitor reaches 75% of the battery voltage, what value of R_5 will accomplish this in a time $t = 52s$?

$$V = V_{max}\left(1 - e^{-\frac{t}{\tau}}\right) \rightarrow \tau = -\frac{t}{\ln\left(1 - \frac{V}{V_{max}}\right)}$$

$$= -\frac{52s}{\ln\left(1 - \frac{0.75V_{max}}{V_{max}}\right)} = 37.5s$$

$$\tau = R_{eq}C \rightarrow R_{eq} = \frac{\tau}{C} = \frac{37.5s}{0.06F} = 625\Omega$$

$$R_{eq} = R_5 + R + \left(\frac{1}{R} + \frac{1}{R} + \frac{1}{R}\right)^{-1} = R_5 + \frac{4}{3}R = R_5 + \frac{4}{3} \times 150\Omega = 625\Omega$$

$$R_5 = 425\Omega$$

b. When the switch S is closed, the initially uncharged capacitor begins to charge. When the potential difference across the resistors has a value $V_R = 75V$, how much energy has been stored in the capacitor?

$$U_e = \frac{1}{2}CV_c^2 = \frac{1}{2}C(V - V_R)^2 = \frac{1}{2} \times 0.06F(250V - 75V)^2 = 918.75J = 919J$$

c. The wires connecting all the devices in the circuit are made of chromium ($\rho_{Cr} = 7190\frac{kg}{m^3}$, $M_{Cr} = 52\frac{g}{mol}$, & $\rho = 1.25 \times 10^{-7}\Omega m$ and chromium donates 1 charge carrier per chromium atom) with a diameter of $d_{wire} = 0.5mm$. Measurements of the current flowing in the circuit show that the current varies in time as the capacitor charges according to $I = I_{max}e^{-\frac{t}{R_{eq}C}}$. At a time $t = 3\tau$, what is the drift velocity of the charge carriers in chromium?

$$n = \left[\frac{\rho_{Cr}}{M_{Cr}}N_A\right] \times 1 = \frac{1\frac{charge\ carrier}{atom\ of\ Cr} \times 7190\frac{kg}{m^3} \times 6.02 \times 10^{23}\frac{atoms\ of\ Cr}{mol\ of\ Cr}}{0.052\frac{kg}{mol\ of\ Cr}}$$

$$n = 8.3 \times 10^{28}\frac{charge\ carriers}{m^3}$$

$$I = I_{max}e^{-\frac{t}{R_{eq}C}} = \frac{V}{R_{eq}}e^{-\frac{t}{\tau}} = \frac{250V}{625\Omega} \times e^{-3} = 0.0199A = 20mA$$

$$I = neAv_d \rightarrow v_d = \frac{I}{neA} = \frac{0.020A}{8.3 \times 10^{28}m^{-3} \times 1.6 \times 10^{-19}C \times \pi(0.25 \times 10^{-3}m)^2}$$

$$v_d = 7.6 \times 10^{-6}\frac{m}{s} = 7.6\frac{\mu m}{s}$$

d. In the figure above, part of the right-hand side of the circuit passes through a pair of circular poles of a magnet $5cm$ in diameter. A Hall probe is placed between the poles of the magnet with the face of the Hall probe parallel to the pole faces. If the width of the Hall probe is $w = 0.2cm$ what magnetic field would be measured at a time $t = 3\tau$? At the time $t = 3\tau$, the voltage measured on the Hall probe was $3.7nV$.

$$V_{Hall} = wv_dB \rightarrow B = \frac{V_{Hall}}{wv_d} = \frac{3.7 \times 10^{-9}V}{0.2 \times 10^{-2}m \times 7.6 \times 10^{-6}\frac{m}{s}} = 0.24T$$

2. An electron is accelerated upwards away from the Earth's surface and passes through the Earth's magnetic field ($B_{Earth} = 5.2 \times 10^{-5}T$) which points north. The electron moves up away from the Earth's surface with a speed $v = 7.2 \times 10^{6}\frac{m}{s}$ perpendicular to the Earth's magnetic field.

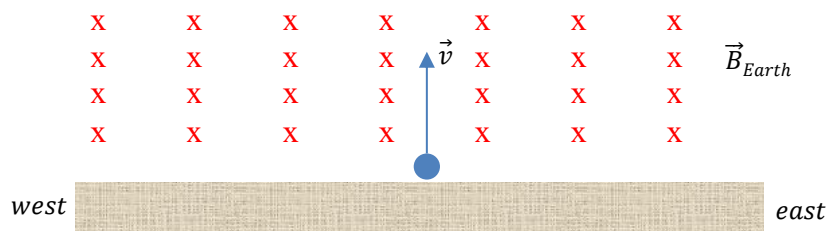

a. Which way does the electron move in the magnetic field and what is the radius of the electron's orbit?

By the RHR, the magnetic force is to the east, so the electron moves in a circle of radius R toward the east.

$$F_B = qvB\sin\theta = evB\sin\theta = ma_c = m\frac{(v\sin\theta)^2}{R} \rightarrow R = \frac{mv\sin\theta}{eB}$$

$$R = \frac{9.11 \times 10^{-31}kg \times 7.2 \times 10^{6}\frac{m}{s} \times \sin 90}{1.6 \times 10^{-19}C \times 5.2 \times 10^{-5}T} = 0.79m$$

b. In the presence of the magnetic field, the electron experiences a magnetic force. Suppose that you wanted the electron to travel away from the surface of the Earth at a constant speed. To do this you decide to introduce an electric field. What magnitude and direction of this electric field would you need for the electron's velocity to remain constant? To earn full credit, in addition to calculating the magnitude of the electric field, you need to explain why the direction is as you state.

By the RHR the magnetic force is to the east. Therefore, to keep the electron moving up away from the Earth, the electric force must point west. Since we have an electron and it feels a force in the direction opposite to the electric field, the electric field must point east.

$$F_x: \ -F_B + F_E = 0 \rightarrow evB - eE = 0$$
$$\rightarrow E = vB = 7.2 \times 10^{6}\frac{m}{s} \times 5.2 \times 10^{-5}T = 374.4\frac{N}{C}$$

c. Suppose that the electron does not leave the Earth's surface vertically, perpendicular to the magnetic field, but rather that the velocity of the electron is pointed into the plane of the paper in the direction of the magnetic field by an angle of $\theta = 40^0$. What is the pitch of the electron's orbit and as you are viewing the electron, does the electron circulate clockwise or counterclockwise? Explain your choice for direction.

From the motion perpendicular to the magnetic field, we calculate the orbital period:

$$v_\perp = v\sin\theta = \frac{2\pi R'}{T'} \rightarrow T' = \frac{2\pi R'}{v\sin\theta} = \frac{2\pi \times 0.60m}{7.2 \times 10^6 \frac{m}{s} \times \sin 50} = 6.9 \times 10^{-7} s$$

where the radius of the electron's orbit is determined from the magnetic force.

$$F_B = qvB\sin\theta = evB\sin\theta = ma_c = m\frac{(v\sin\theta)^2}{R} \rightarrow R' = \frac{mv\sin\theta}{eB}$$

$$R' = \frac{9.11 \times 10^{-31} kg \times 7.2 \times 10^6 \frac{m}{s} \times \sin 50}{1.6 \times 10^{-19} C \times 5.2 \times 10^{-5} T} = 0.60m$$

The pitch is determined from the motion parallel to the magnetic field:

$$v_\parallel = v\cos\theta = \frac{L}{T'}$$

$$\rightarrow L = vT'\cos\theta = 7.2 \times 10^6 \frac{m}{s} \times 6.9 \times 10^{-7} s \times \cos 50 = 3.2m$$

d. What is the period of the electron's orbit for the case in part c?

From part c,

$$T' = \frac{2\pi R'}{v\sin\theta} = \frac{2\pi \times 0.60m}{7.2 \times 10^6 \frac{m}{s} \times \sin 50} = 6.9 \times 10^{-7} s$$

3. A bar of mass $m = 250g$ and length $L = 30cm$ sits at rest on a set of horizontal rails as shown below. The bar is square in cross-section with a side width $w = 2mm$.

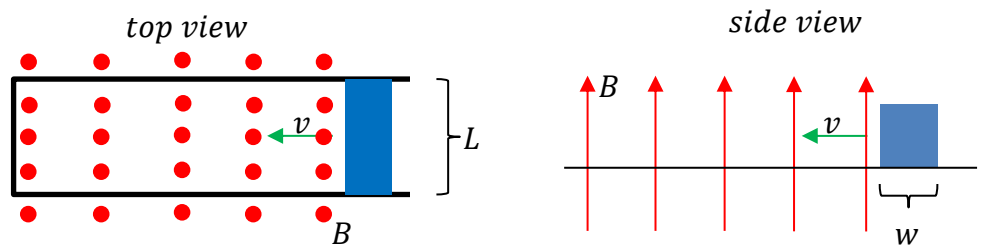

a. If the bar is made of tungsten ($\rho_W = 5.6 \times 10^{-8}\Omega m$), what is the resistance of the bar?

$$R = \frac{\rho_W L}{A} = \frac{\rho_W L}{w^2} = \frac{5.6 \times 10^{-8}\Omega m \times 0.3m}{(2 \times 10^{-3}m)^2} = 0.0042\Omega = 4.2 \times 10^{-3}\Omega = 4.2\text{m}\Omega$$

b. Suppose the bar is given a kick to the left and slides along the rails with an initial speed $v = 12\frac{m}{s}$. What is the magnitude and direction of the current induced in the bar if the magnetic field has a magnitude $B = 2mT$? Assume that the magnetic field is parallel to the normal to the loop of wire. To earn full credit be sure to explain your choice for the direction of the current flowing in the bar.

Since the magnetic field is pointing out of the page, as the bar moves to the left, the magnetic flux is decreasing. To undo the decrease, we need to put magnetic field back into the loop. By Lenz's law the current must flow counterclockwise around the circuit.

$$I = \frac{\varepsilon}{R} = \frac{Blv}{R} = \frac{2 \times 10^{-3}T \times 0.3m \times 12}{0.0042\Omega} = 1.7A$$

c. What is the magnitude and direction of the electric field induced in the bar by the changing magnetic flux through the loop of wire?

Since the current is flowing counterclockwise in the bar the electric field must point up the bar, counterclockwise around the circuit also.

$$E = -\frac{\Delta V}{\Delta y} = \frac{\varepsilon}{L} = \frac{BLv}{L} = Bv = 2 \times 10^{-3}T \times 12\frac{m}{s} = 0.024\frac{V}{m} = 24\frac{mV}{m}$$

d. Suppose that you decide to pull the bar across the rails with a force F. This force F is such that the bar moves across the rails at a constant speed $v = 12\frac{m}{s}$. In a time $\Delta t = 5s$, how much energy is dissipated across the bar as heat? Assume that the rails are frictionless.

$$P = \frac{\Delta E}{\Delta t} \rightarrow \Delta E = P\Delta t = I^2 R\Delta t = (1.7A)^2 \times 0.0042\Omega \times 5s = 0.061J = 61mJ$$

Physics 111 Formula Sheet

Electrostatics

$F = k\frac{q_1 q_2}{r^2}$

$\vec{F} = q\vec{E}; \quad E_{pc} = k\frac{q}{r^2}; \quad E_{plate} = \frac{q}{\epsilon_0 A}$

$E = -\frac{\Delta V}{\Delta x}$

$V_{pc} = k\frac{q}{r}$

$U_e = k\frac{q_1 q_2}{r} = qV$

$W = -q\Delta V = -\Delta U_e = \Delta K$

Electric Circuits - Capacitors

$Q = CV; \quad C = \frac{\kappa\epsilon_0 A}{d}$

$C_{parallel} = \sum_{i=1}^{N} C_i$

$\frac{1}{C_{series}} = \sum_{i=1}^{N} \frac{1}{C_i}$

$Q_{charging}(t) = Q_{max}\left(1 - e^{-\frac{t}{\tau}}\right)$

$Q_{discharging}(t) = Q_{max} e^{-\frac{t}{\tau}}$

$I(t) = I_{max} e^{-\frac{t}{\tau}} = \frac{Q_{max}}{\tau} e^{-\frac{t}{\tau}}$

$\tau = RC$

$U_C = \frac{1}{2}qV = \frac{1}{2}CV^2 = \frac{Q^2}{2C}$

Light as a Wave

$c = f\lambda$

$S(t) = \frac{\text{Energy}}{\text{time}\times\text{Area}} = c\epsilon_0 E^2(t) = c\frac{B^2(t)}{\mu_0}$

$I = S_{avg} = \frac{1}{2}c\epsilon_0 E_{max}^2 = c\frac{B_{max}^2}{2\mu_0}$

$P = \begin{cases} \frac{S}{c}; & \text{absorbed} \\ \frac{2S}{c}; & \text{reflected} \end{cases}$

$S = S_0 \cos^2 \theta$

$v = \frac{c}{n}$

$\theta_{\text{incident}} = \theta_{\text{reflected}}$

$n_1 \sin\theta_1 = n_2 \sin\theta_2$

$P = \frac{1}{f} = \frac{1}{d_0} + \frac{1}{d_i}$

$M = -\frac{d_i}{d_0}; \quad |M| = \frac{h_i}{h_0}$

Magnetism

$\vec{F} = q\vec{v} \times \vec{B} \rightarrow F = qvB\sin\theta$

$\vec{F} = I\vec{L} \times \vec{B} \rightarrow F = ILB\sin\theta$

$V_{Hall} = wv_d B$

$B = \frac{\mu_0 I}{2\pi r}$

$\varepsilon = \Delta V = -N\frac{\Delta\phi_B}{\Delta t}$

$\phi_B = BA\cos\theta$

Electric Circuits - Resistors

$I = \frac{\Delta Q}{\Delta t}$

$I = neAv_d; \quad n = \frac{\rho N_A}{m}$

$V = IR$

$R = \frac{\rho L}{A}$

$R_{series} = \sum_{i=1}^{N} R_i$

$\frac{1}{R_{parallel}} = \sum_{i=1}^{N} \frac{1}{R_i}$

$P = \frac{\Delta E}{\Delta t} = IV = I^2 R = \frac{V^2}{R}$

Light as a Particle/Relativity

$E = hf = \frac{hc}{\lambda}$

$K_{max} = hf - \phi$

$\Delta\lambda = \lambda' - \lambda = \frac{h}{mc}(1 - \cos\phi)$

$\frac{1}{E'} = \frac{1}{E} + \frac{(1-\cos\phi)}{E_{rest}}; \quad E_{rest} = mc^2$

$\gamma = \frac{1}{\sqrt{1-\frac{v^2}{c^2}}}$

$p = \gamma mv$

$E_{total} = E_{rest} + K = \gamma mc^2$

$K = (\gamma - 1)mc^2$

$E_{total}^2 = p^2c^2 + m^2c^4$

Nuclear Physics

$N = N_0 e^{-\lambda t}$

$m = m_0 e^{-\lambda t}$

$A = A_0 e^{-\lambda t}$

$A = \lambda N$

$t_{\frac{1}{2}} = \frac{\ln 2}{\lambda}$

Constants

$g = 9.8 \frac{m}{s^2}$

$1e = 1.6 \times 10^{-19} C$

$k = \frac{1}{4\pi\epsilon_0} = 9 \times 10^9 \frac{Nm^2}{C^2}$

$\epsilon_0 = 8.85 \times 10^{-12} \frac{C^2}{Nm^2}$

$1eV = 1.6 \times 10^{-19} J$

$\mu_0 = 4\pi \times 10^{-7} \frac{Tm}{A}$

$c = 3 \times 10^8 \frac{m}{s}$

$h = 6.63 \times 10^{-34} Js = 4.14 \times 10^{-15} eVs$

$N_A = 6.02 \times 10^{23}$

$1u = 1.66 \times 10^{-27} kg = 931.5 \frac{MeV}{c^2}$

$m_p = 1.67 \times 10^{-27} kg = 937.1 \frac{MeV}{c^2}$

$m_n = 1.69 \times 10^{-27} kg = 948.3 \frac{MeV}{c^2}$

$m_e = 9.11 \times 10^{-31} kg = 0.511 \frac{MeV}{c^2}$

Physics 110 Formulas

$\vec{F} = m\vec{a}; \quad F_G = \frac{GM_1m_2}{r^2}; \quad F_s = -ky; \quad a_c = \frac{v^2}{r}$

$W = -\Delta U_g - \Delta U_s = \Delta K$

$U_g = mgy$

$U_s = \frac{1}{2}ky^2$

$K = \frac{1}{2}mv^2$

$\vec{r}_f = \vec{r}_i + \vec{v}_i t + \frac{1}{2}\vec{a}t^2$

$\vec{v}_f = \vec{v}_i + \vec{a}t$

$v_f^2 = v_i^2 + 2a_r\Delta r$

Common Metric Units

$nano\ (n) = 10^{-9}$

$micro\ (\mu) = 10^{-6}$

$milli\ (m) = 10^{-3}$

$centi\ (c) = 10^{-2}$

$kilo\ (k) = 10^{3}$

$mega\ (M) = 10^{6}$

Geometry/Algebra

Circles: $A = \pi r^2$ $\quad C = 2\pi r = \pi$

Spheres: $A = 4\pi r^2$ $\quad V = \frac{4}{3}\pi r^3$

Triangles: $A = \frac{1}{2}bh$

Quadratics: $ax^2 + bx + c = 0 \rightarrow x = \frac{-b \pm \sqrt{b^2 - 4ac}}{2a}$